IOTAFLOW
SYSTEMS PVT. LTD

ELECTROMAGNETIC FLOW METER

IOTAFLOW MF "PRO M"

INSTALLATION MANUAL

" If You Want To Manage It, Measure It "

www.iotaflow.com

Dear Customer:

Thanks for choosing our flowmeter products. Please read this manual carefully to know how to install and use this product to ensure its best performance. If you should encounter a problem when using the product, please do not hesitate to let us know. We are going to
take no responsibility if the flowmeteris damaged because of anyone repair or replace any parts of it with our permission.

Support :-

Please reach to us according to the contact information below to get support or update of our **IOTAFLOW MF "PRO M" :**

Website :-
www.iotaflow.com
Telephone :-
+91-11-46254601-06, 9910693866
E-mail:-
contact@iotaflow.com, service@iotaflow.com

Place an order :-

If you need to place an order or need to know the status of your processing orders, please contact us according to below information:

Phone:-
+91-11-9810589043
Website:-
www.iotaflow.com
Email:-
contact@iotaflow.com
Address:-
C 2/13, Mayapuri Industrial Area – II, New Delhi – 110 064

TABLE OF CONTENTS

INTRODUCTION 4
1. SAFETY INSTRUCTIONS 5
2. MOUNTING PREPARATION 5
3. MOUNTING 6
3.1. General Requirements 6
3.2. Mounting the Flow Meter into the Pipeline 6
3.3. Wiring the Flow Meter 12
4. DISMOUNTING 14
5. PUTTING INTO OPERATION 15
APPENDIX A. Carbon steel structures for mounting flow meters into the pipeline…… 16
APPENDIX B. Holder to Fix Metal Sleeves for Power and Communication Cables 24

The present manual covers procedures for on-site mounting and dismounting of **IOTAFLOW MF** electromagnetic flow meters, Pro-×××M× version, Pro-112MI, -122MI, -212MI, -222MI, -111MA,-121MA, -211MA, -221MA, -112MC, -122MC, -212MC, -222MC models. In the course of work, also refer to the "**IOTAFLOW MF** electromagnetic flow meter. Version Pro-×××M×. Operation manual" document.

LIST OF ABBREVIATIONS

DN - Nominal Diameter
MB - Measuring Block
MF - Electromagnetic Flowmeter

CAUTION!

1. **Flow meter can be mounted** into metal hot fluid pipeline only if mount components of the pipeline allow for pipeline expansion to prevent deformation of the flow meter flow pipe.
2. **DO NOT** touch electrodes in the flow pipe inner channel at any time when working with the electromagnetic flow meter.
3. When the flow meter is energized, **DO NOT** perform electric welding in the room if pipeline where the flow meter is installed is not filled with liquid, and on the pipeline where the flow meter is installed.
4. While welding, passing of weld current through the flow meter case is **STRICTLY FORBIDDEN**.
5. While welding, **DO NOT** use the flow meter as an installation tool. Install the flow pipe dimension simulator provided in the delivery package.
6. When mounting and using the flow meter, **DO NOT** remove protection rings from the flow pipe. Protection rings are installed to protect projecting fluoroplastic lining.
7. **DO NOT** rotate the flow meter mounted in the pipeline around the pipeline axis.
8. If flow pipe is covered with fluoroplastic and protection rings are removed, **DO NOT** remove the tightening stud (bolt) and clamping plates from the flow meter for more than 10 minutes. The clamping plates shall be removed right before mounting the flow meter into the pipeline.
9. When moving, **DO NOT** lift the flow meter by its measuring block.

1. SAFETY INSTRUCTIONS

1.1. The flow meter should be mounted (dismounted) by technicians:

- Certified for performing work of this type
- Having the right to work with electrical installations up to 1000 V
- Familiar with all the instructions outlined for the flow meter and auxiliary equipment used for mounting and dismounting.

1.2. When working with the flow meter, the dangerous factors are as follows:

- AC voltage (RMS value up to 264 V, frequency 50/60 Hz)
- Pipeline pressure (up to 2.5 MPa)
- Medium temperature (up to 150°C).

1.3. In the course of mounting (dismounting) DO NOT:

- Connect to the MF, switch over modes or replace electronic components when the flow meter is powered up
- Remove the MF from the pipeline until pressure in the pipeline section worked on is fully released
- Use faulty electronic devices and electric tools or use them without proper grounding.

1.4. Prior to performing work, make sure with use of the appropriate equipment that no dangerous AC/DC voltage that may cause injury or death is applied to pipeline section to be worked on.

2. MOUNTING PREPARATION

2.1. The MF should be transported packed in the manufacturer's box.

2.2. After the MF has been moved to the mounting location from a cold environment into a warm one (with ambient temperature above zero), it shall be left in the manufacturer's box for at least 3 hours to make sure that no moisture will condensate inside.

2.3. When unpacking, check that the delivery package contains all items specified in the Equipment Certificate.

3. MOUNTING

3.1. General Requirements

When mounting the MF on site, a free pipeline section should be provided. It is used to mount the flow meter and straight pipe runs of appropriate length upstream and downstream the flow pipe.

Overall dimensions and weight of the MF are given in Appendix A of the Operation Manual.

CAUTION! You must choose a mounting location for MF so that the conditions meet the requirements specified in the Operation Manual.

3.2. Mounting the Flow Meter into the Pipeline

3.2.1. Mounting considerations:

- The MF may be mounted into horizontal, vertical, or sloping pipeline without need of dirt traps or special filters
- To prevent air accumulation at the mounting location, the MF should not be placed at the upper point of the pipeline or in the open-ended pipeline; the best place to mount the MF (if applicable) is the lower or the uprising pipeline run (see Fig.1)
- The liquid pressure in the pipeline shall be chosen so that to prevent gas development
- The MF should be mounted in the pipeline where liquid pulsation and turbulence are minimal.

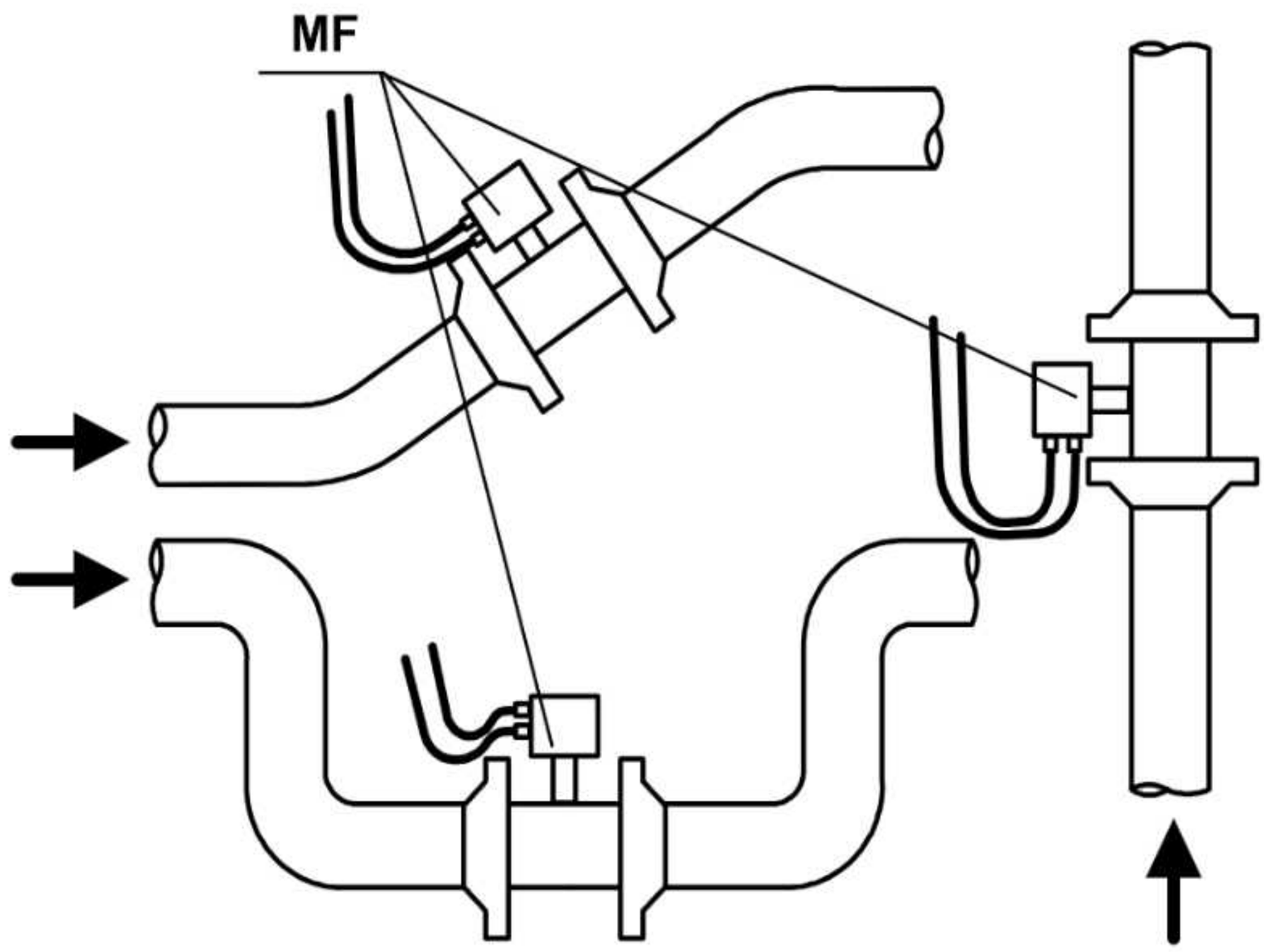

Fig.1. Recommended MF locations.

- Straight pipe runs with nominal diameter (DN) equal to nominal diameter of the MF should be provided upstream and downstream the MF. Length of the runs should not be less than specified in Table 1. The runs must not include devices or components that may disturb flow structure
- When the MF is operated, the flow pipe inner channel should be fully filled with liquid
- When mounting the MF into horizontal or oblique pipeline, position the axis of the measuring block (MB) stand in vertical plane going through the pipeline axis. Maximum deflection is ±30°
- Intensity of external magnetic field (commercial frequency) should not exceed 400 A/m.

Table1. Length of straight pipe runs

Unidirectional flow		Bidirectional flow	
upstream MF	downstream MF	upstream MF	downstream MF
5·DN	2·DN	5·DN	3·DN

3.2.2. The assembly-welded structure can be used to mount the flow meter into the metal pipeline. The structure is assembled from fittings and included in the delivery package.

Fittings provided on request can be used to mount the flow meter into the plastic (metal-plastic) pipeline.

3.2.3. Fitting assembly to mount into the metal pipeline.

3.2.3.1. A fitting assembly for the assembly-welded structure includes:

- Flat weld flanges (modified)
- Flow pipe dimension simulator of appropriate size and design (flanged or wafer type)
- Gaskets
- Fasteners.

The simulator overall mounting dimensions and DN correspond to the dimensions of the flow meter flow pipe to be mounted with this fitting assembly. The simulator is installed instead of the MF when performing mounting or welding or dispatching the MF for regular verification or repair.

In addition, the assembly may include straight pipe runs of appropriate length (DNs equal to DN of the MF) and concentric adaptors to provide connection from pipeline greater DN1 (DN2) to the lesser DN of the MF.

View of assembly-welded structures made of stainless steel and fully assembled from all components, reference linear dimensions, and types of flange modifications are specified in Appendix A.

NOTE. It is prohibited to reduce length of supplied straight pipe runs to meet requirements for length of straight pipe runs provided in Table 1.

Delivery package is agreed with the customer. Set of design documentation for the fitting assembly is available at customer's option.

3.2.3.2. Welding of assembly-welded structure components and connection of the components to the pipeline at flow meter location must be performed in compliance with applicable regulatory documents. **Alignment** of the whole unit and **flatness/parallel alignment** of the flanges upstream and downstream the flow meter flow pipe must be provided.

3.2.3.3. The procedure for manufacturing the assembly-welded structure is as follows:

a) Weld the flanges to the straight pipe runs (pipeline) considering that the straight pipe run (pipeline) axis should be perpendicular to the flange plain adjacent to the flow pipe (see Fig.2).

b) If necessary, weld the adaptors to the opposite ends of the pipe runs (see Fig.3).

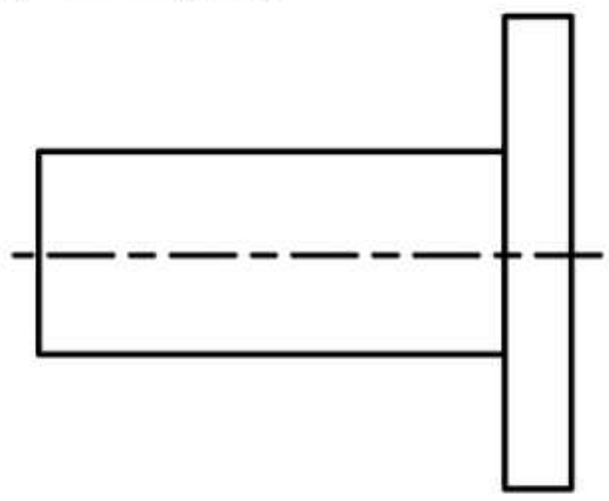

Fig.2

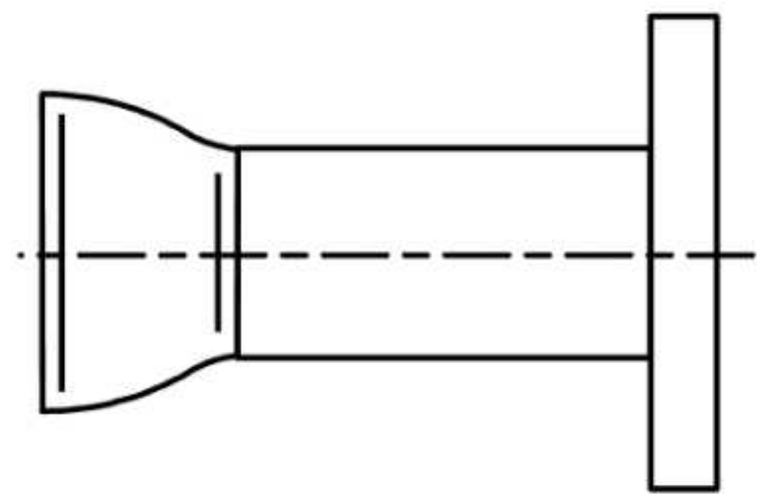

Fig.3

CAUTION! Overlaps and undercuts inside the channel are unacceptable. After completing the work, remove burrs and scales from the inside.

c) Assemble the whole structure fixing components with bolts (studs), see Appendix A. Please make sure that the simulator is installed into the assembly-welded structure instead of the flow meter to provide alignment between two welded units, to ensure flatness/parallel alignment of the flanges adjacent to the flow pipe and to avoid damages of the MF during welding of the structure to the pipeline. During assembling make sure that mounting gaskets included in the fitting assembly are installed, all assembling bolts (studs) are used and all nuts are tightened according to Clause 3.2.8.4 of this Manual.

While assembling, please pay attention to the alignment of threaded holes M5 on cylindrical surface of the flanges adjacent to the flow pipe. Holes used to connect wires to the MF case must be located in line that is parallel to the structure axis and allow easy connection of the wires.

3.2.4. Fitting assembly to mount into the plastic (plastic-metal) pipeline.

3.2.4.1. The fitting assembly for the assembly structure includes:

- Two straight adaptors of appropriate length with DN equal to the flow meter DN. Flat flange (modified) is welded to one of the adaptor ends.

The other (free) end of the adaptor is threaded with straight pipe outer thread

- Flow pipe dimension simulator of appropriate size and design (wafer type)
- Gaskets
- Fasteners.

3.2.4.2. The simulator overall mounting dimensions and DN correspond to the dimensions of the flow meter flow pipe to be mounted with this fitting assembly.

Assembly view, reference linear dimensions, and types of flange modifications are specified in Appendix A.

3.2. 4.3. The procedure for assembling fitting assembly is as follows:

a) Put mounting gaskets included in the fitting assembly into adaptor flanges.

b) Place simulator between adaptor flanges and assemble the whole structure fixing components with studs. During assembling use all studs and tighten nuts according to Clause 3.2.7.4 of this Manual.

While assembling, please pay attention to the alignment of threaded holes M5 on cylindrical surface of the flanges adjacent to the flow pipe. Holes used to connect wires to the MF case must be located in line that is parallel to the structure axis.

3.2.5. Mounting fitting assembly into the metal pipeline.

3.2.5.1. Before mounting an assembly (assembly-welded structure), fix the pipes that may tip out of their axes after cutting the pipeline to stationary supports by clamps. Drain liquid from the pipeline, cut it and mount the fitting assembly considering the following conditions:

- The longer straight pipe run should be the first upstream
- Threaded holes M5 on cylindrical surface of the flanges used to connect wires to the MF case should be in position allowing easy connection of the wires.

3.2.5.2. When welding the fitting assembly to the pipeline, the inside of the assembly and pipeline should be protected from burrs and scales.

After welding the weld joints must be stress relieved by means of heat treatment.

3.2.5.3. After completion of work, check weld joints and matting faces for leakages according to current norms specified for pipelines of this type. Re-weld bad joints and replace gaskets, if necessary.

Wash the system before the simulator is replaced by the flow meter.

The fitting assembly should not be subjected to stresses and strains from the pipeline (bending, compression, tension, twisting caused by disbalance, misalignment or torque nonuniformity). To prevent this, leave supports of the inlet and outlet ducts and tighten fastening clamps.

3.2.6. Mounting fitting assembly into the plastic (metal-plastic) pipeline.

3.2.6.1. Before mounting drain liquid from the pipeline and cut the pipeline where the flow meter will be installed. Fix the assembly to stationary supports by clamps where pipeline is cut considering the following condition: threaded holes M5 on cylindrical surface of the flanges used to connect wires to the MF case should be in position allowing easy connection of the wires.

3.2.6.2. Connect pipeline ends to the fitting assembly using fittings of appropriate typical size which are installed on plastic (metal-plastic) pipelines.

An adaptor coupling may be used as confusors/diffusors if a different diameter of the pipe is necessary.

3.2.6.3. After completion of work put the pipeline into operation to check joints and connections for leakages according to current norms specified for pipelines of this type.

Wash the system before the simulator is replaced by the flow meter.

3.2.7. Mounting the flow meter into the metal pipeline.

3.2.7.1. Position the flow meter so that the axis of the measuring block stand is arranged in vertical plane with maximum deflection of ±30°. The arrow on the flow pipe shall point to the flow direction.

NOTES.

1. Before mounting the flow meter into the pipeline remove protection rings from the flow pipe lining if liquid under control is aggressive towards the material of protection rings.
2. The flow meter for measuring bidirectional flow may be installed without regard to the pipeline flow direction.

3.2.7.2. The non-flanged flow meters of Pro-×1×M× versions with protection rings are automatically centered relative to companion flanges of the pipeline since outer diameter of external rings matches the diameter of flange grooves.

When mounting the MF, put new gaskets provided in the delivery package into the companion flanges.

To move pipeline flanges apart when installing or removing the MF (simulator), it is recommended to use a special extension tool.

3.2.7.3. When installing flow meters of Pro-×2×M× versions (flanged flow meters), put bolts into mating flanges of the flow pipe from the side of the pipeline flanges. Length of the bolts must provide the distance of minimum 3 mm from a bolt end to the flow meter assembly.

Alignment of the pipeline and flow pipe inner channel is provided when flow meter flanges are aligned with pipeline companion flanges.

When the simulator is replaced by the flow meter, put additional gaskets included in the delivery package to provide leak tightness of joints between flow meter flanges and pipeline mating flanges (if necessary).

CAUTION! Please make sure that gaskets are aligned relative to the flow pipe inner channel, i.e. a gasket must not even partly cover the inner channel. To provide gasket alignment, it is recommended to fix the gaskets by adhesive.

The flow meter shall be mounted into the pipeline when all construction, welding and other works are finished.

3.2.7.4. When mounting the MF (simulator) into the pipeline tighten nuts in order specified in Fig 5, using a torque indicating wrench with maximum torque value as per Table 2. **Exceeding torque value may cause damage to the flow pipe resulted in leaking of liquid into the inner cavity of the MF.**

To prevent disbalance and misalignment, it is recommended to tighten nuts in several steps increasing torque step-by-step up to the value specified in Table 2 while controlling alignment of the mating flanges.

Table 2

DN, mm	20	25	32	40	50	65	80	100	150	200	300
Torque, N·m	15	20	25	35	35	40	50	60	80	100	150

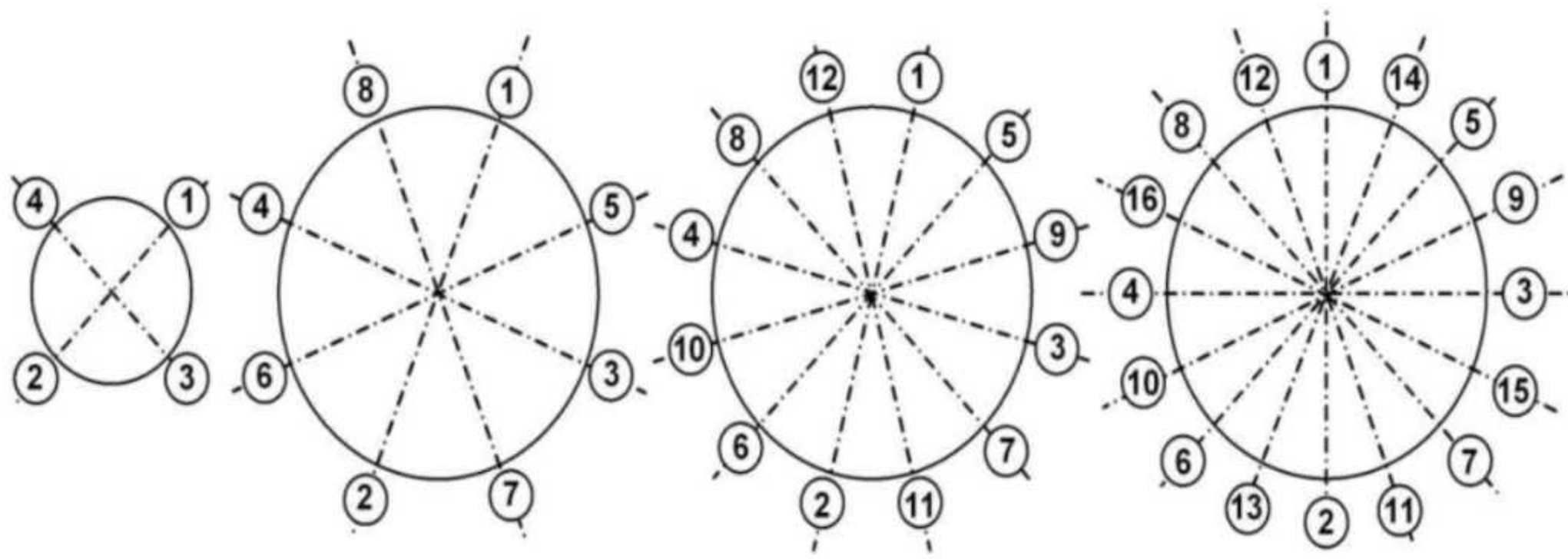

Fig 5. Order of tightening flange nuts

DO NOT rotate the MF mounted in the pipeline around the pipeline axis.

3.2.8. A flow meter is mounted into the plastic (metal-spastic) pipeline the same way as a construct flow meter of wafer type is mounted into the metal pipeline.

CAUTION! Follow recommendations of pipe manufacturers when mounting into plastic (metal-plastic) pipelines.

3.3. Wiring the Flow Meter

3.3.1. Power and communication cables are connected to the MF after it is installed into the pipeline. Cables are passed via corresponding MB through connections and connected to boards of processor and communication modules. Schematics of the input and outputs are given in Appendix B of the Operation Manual.

The MF power supply cables should be connected considering the operating conditions. As a power cable, you may use any 24 V two-wire circular section cable with the cross section of at least 0.5 mm^2. Cable length for one MF is up to 500 m.

It is permissible to power several flow meters from one secondary power source only if there is no difference in potential between pipelines where flow meters are installed. In this case, permissible cable length is reduced proportionally.

As a communication cable for a serial interface output and general-purpose outputs, you can use any two/four-wire circular section cable with the cross section of at least 0.35 mm^2 and length of up to 300 m. Use four-wire cable for simultaneous connection of both general-purpose outputs.

A cable for the current output is selected considering load rating of the output as well as the parameters of an input connected to receive the current signal.

Power and communication cables used shall comply with the flow meter operating conditions.

3.3.2. Prior to connection, cut isolation from cable ends by 5 mm and solder them. Attach the socket (cable) connector provided in the delivery package to the power cable considering polarity, then attach the socket connector to the plug on the processor module board. Cables for the control input and general-purpose outputs are directly connected to the terminals on the communication module board.

The power cable is passed through one cringle next to the sticker 24 V; the communication cable — through the other cringle.

CAUTION! To ensure appropriate protection of IP65 flow meter, wiring shall be performed according to the following requirements:

- When mounting the flow meter into a sloping or vertical pipeline install measuring block with through connections downwards
- Use circular section cables with outer diameter of 6.0–9.5 mm as power and communication cables
- Seals of the measuring block case should be clean, undamaged and placed in corresponding grooves without waves and loops
- Plugs shall be installed into unused through connections
- MB cover screws and through connection nuts shall be properly tightened after wiring.

To prevent measuring block from moisture ingress via through connections when using flat section cables it is necessary to connect cables so that falling U-loop is formed in the vertical plane (see Fig.6).

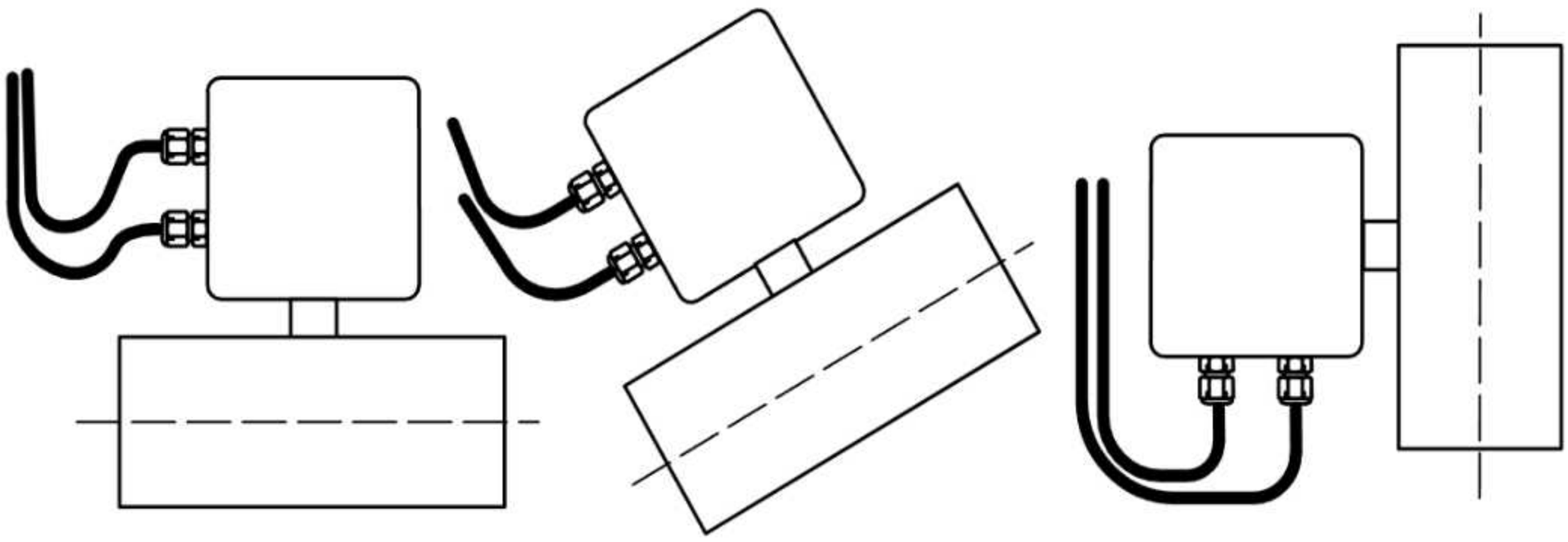

a) horizontal *b) sloping* *c) vertical*

Fig.6. Position of cables at the inlet of through connections when mounting MF into the pipeline

3.3.3. Communication cables and a network cable are fixed on the wall if possible. To avoid mechanical damages, it is recommended to place them in a metal tube or sleeve. Communication and power cables may be placed in the same tube (sleeve).

You may use a holder (see Appendix B) to fix metal sleeves with power and communication cables to the MB.

DO NOT fix the cables to the pipeline with heat-carrying medium.

3.3.4. To provide electrical contact, it is necessary to connect sections of the pipeline that was cut in the MF mounting location by wires via a terminal located on the MB. Wire cross section should be at least 4 mm^2. If the pipeline has cathode protection, cross section of the wires shall correspond to the value of cathode protection current.

Use threaded holes M5 on cylindrical surface of the flanges to connect the jumpers.

3.3.5. The need in protective grounding of the device is determined based on power supply value and environment conditions.

To avoid device failure do not use a lightning protection system as protective grounding.

The grounding conductor (mechanically protected copper wire) cross-section must be at least 2.5 mm^2 and at least 4 mm^2 if the grounding conductor has no mechanical protection.

The grounding conductor is connected to the MB fixing screw. Wires for connection to the pipeline flanges are also connected to this screw.

CAUTION! If the pipeline is equipped with cathode protection, do not ground the flow meter.

4. DISMOUNTING

4.1. The order of dismounting the flow meter before dispatching for regular calibration or repair is as follows:

- Turn off power, then disconnect network and signal cables from the flow meter
- Disconnect wires from the pipeline flanges
- Cut off liquid at the FS location, make sure that pressure is released and drain the liquid
- Dismount the flow meter and install the simulator
- **Immediately after the MF covered by fluoroplastic without protection rings is dismounted from the pipeline, install protection rings or clamping plates with a tightening stud (bolt) on the MF.**

4.2. After simulator installation check mating surfaces for leakage. Replace gaskets, if necessary. In case that no leakages are found, put the pipeline into operation.

4.3. Remove sediment and liquid residues from the inner channel of the flow meter flow pipe before packing.

5. PUTTING INTO OPERATION

5.1. When putting the flow meter into operation check the following:

- The flow is in the direction of the arrow on the flow meter case
- Lengths of the inlet and outlet straight pipe runs of the MF are relevant to the flow reversibility
- The flow meter and related equipment are connected in accordance with the selected wiring diagram
- Flow meter outputs operate in the preset modes
- Power supply voltage corresponds to specifications.

5.2. At first power-up or after a long break in operation, the flow meter becomes operational after:

- It is washed by medium for 30 minutes
- It is kept powered for 30 minutes.

5.3. To prevent changing of service parameters after putting the device into operation, you can seal terminal pairs that allow to change these parameters on the communication module board.

To protect the device from unauthorized access during operation two fixing screws of the measuring block case cover can be sealed.

If a bypass is installed, it is necessary to seal its gates in closed position.

APPENDIX A. Carbon steel structures for mounting flow meters into the pipeline

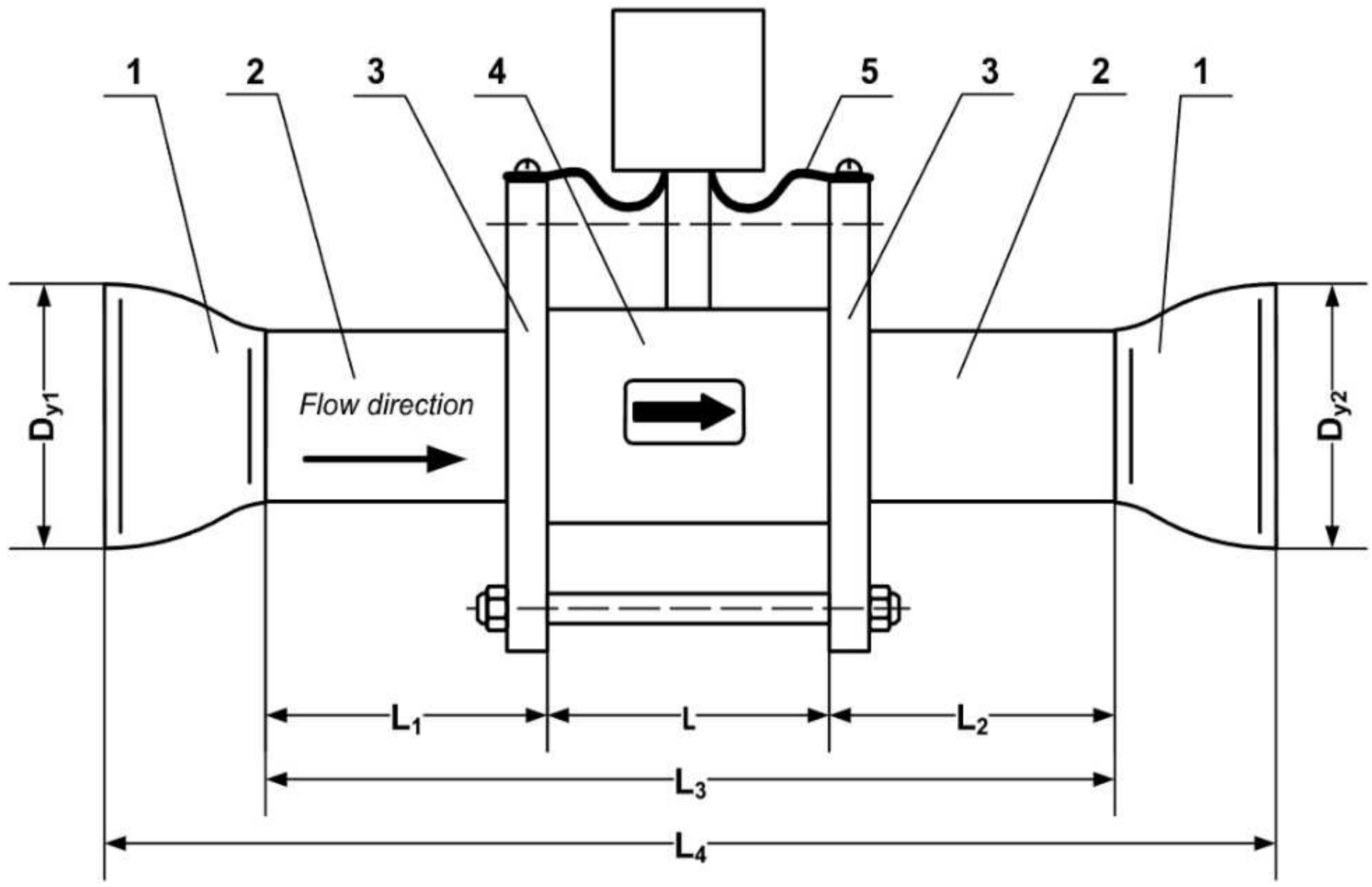

1 — taper adaptor; 2 — straight pipe run; 3 — mating flange; 4 — MF (flow pipe dimension simulator); 5 — wires connecting MF case and pipeline.

Fig A.1. Assembly-welded structure for mounting flow meters of Pro-×12M× versions (lined with fluoroplastic) with protection rings (wafer type) into the pipeline

Table A.1. Dimensions of the assembly-welded structure for MFs of Pro-×12M× versions with protection rings (mm)

DN	DN_1, DN_2	L*	L_1*	L_2*	L_3*	L_4*	Notes
20	25	114	127	87	328	385	
	32					385	
	40					385	
	50					415	
	65					555	**
	80					565	**
25	32	114	152	102	368	425	
	40					425	
	50					455	
	65					595	**
	80					605	**
	100					615	**
32	40	124	187	122	433	490	
	50					520	
	65					540	
	80					670	**
	100					680	**

Table A.1 (continued)

DN	DN1, DN2	L*	L1*	L2*	L3*	L4*	Notes
40	50	134	232	152	518	675	
	65					725	
	80					735	
	100					865	**
	125					905	**
	150					855	**
50	65	154	288	188	630	767	
	80					777	
	100					787	
	125					827	
	150					777	
65	80	175	363	233	771	918	
	100					928	
	125					968	
	150					918	
	200					958	
80	100	175	438	278	891	1048	
	125					1088	
	150					1148	
	200					1078	
	250					1328	**
	300					1328	**
	350					1588	**
100	125	216	538	338	1092	1288	
	150					1348	
	200					1278	
	250					1368	
	300					1368	
	350					1788	**
	400					1788	**
150	200	236	794	494	1524	1797	
	250					1877	
	300					1797	
	350					1957	
	400					1957	
	500					2557	**

* - reference dimensions without processing tolerances

** - adaptor is made of two concentric adaptors

Note. The total length “L*”, mm, of flow meter, lined with polyurethane without protection rings reduced to 8 mm.

Flat weld flanges (for 2.5 MPa pressure) are used to mount the MF into the pipeline:

- For DN20 — flanges of design type 1 (with a fixing ridge)
- For DN25–DN150 — flanges of design type 3 (with a notch)

Modification of flanges is needed before welding which means drilling a threaded hole M5 on the flange cylindrical surface to fix wires (Fig.A.2).

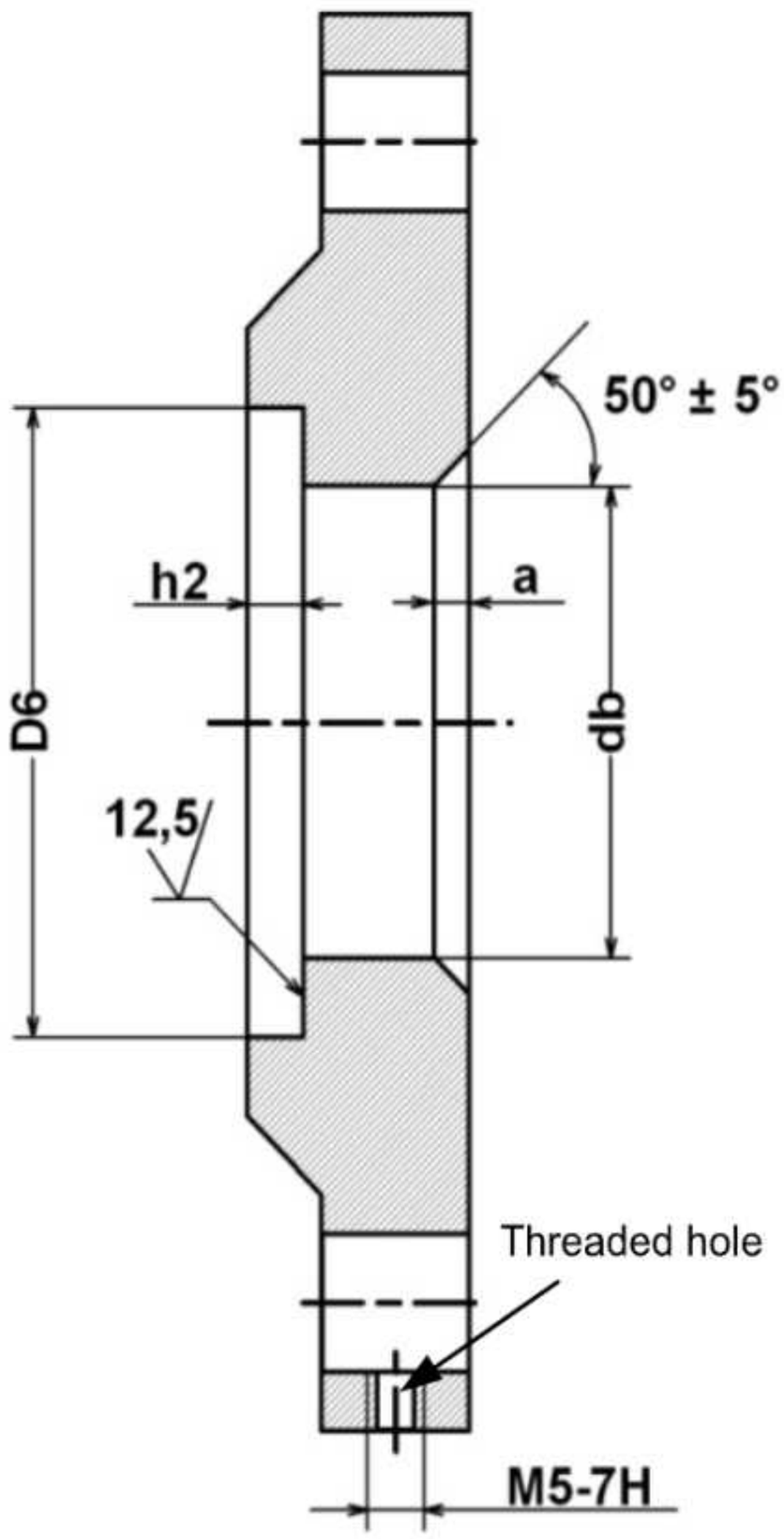

DN, mm	D6, mm	h2, mm	a, mm	db, mm	Initial flange
20	51 H12	$3^{+0.5}$	3	33	Flange 1-25-25 St25

Fig.A.2. Modification of flanges to mount MF DN20

To weld flanges for MFs with DN20, shown in Fig.A.2, to the pipeline, adaptors shall be used (see Fig.A.3) with length of no less than that of the straight pipe run (see Table 1).

After welding the flange to the adaptor, process the surface adjacent to the flow meter as shown in Fig.A.4. The adaptors and pipeline sections are welded butt-to-butt.

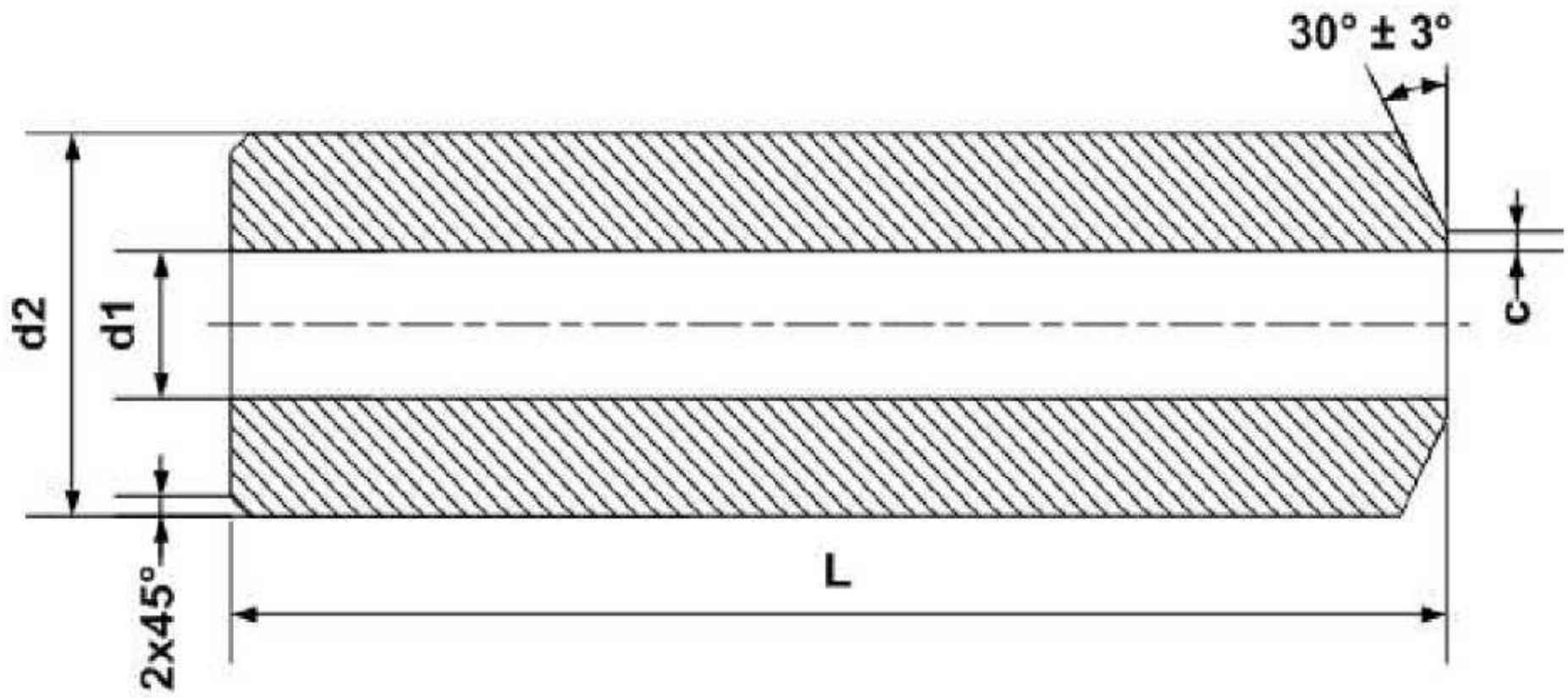

DN, mm	d1, mm	d2, mm	d3, mm	c, mm	L, mm
20	20	32	-	1±0,5	84
					124

Fig.A.3. View and dimensions of adaptor DN20

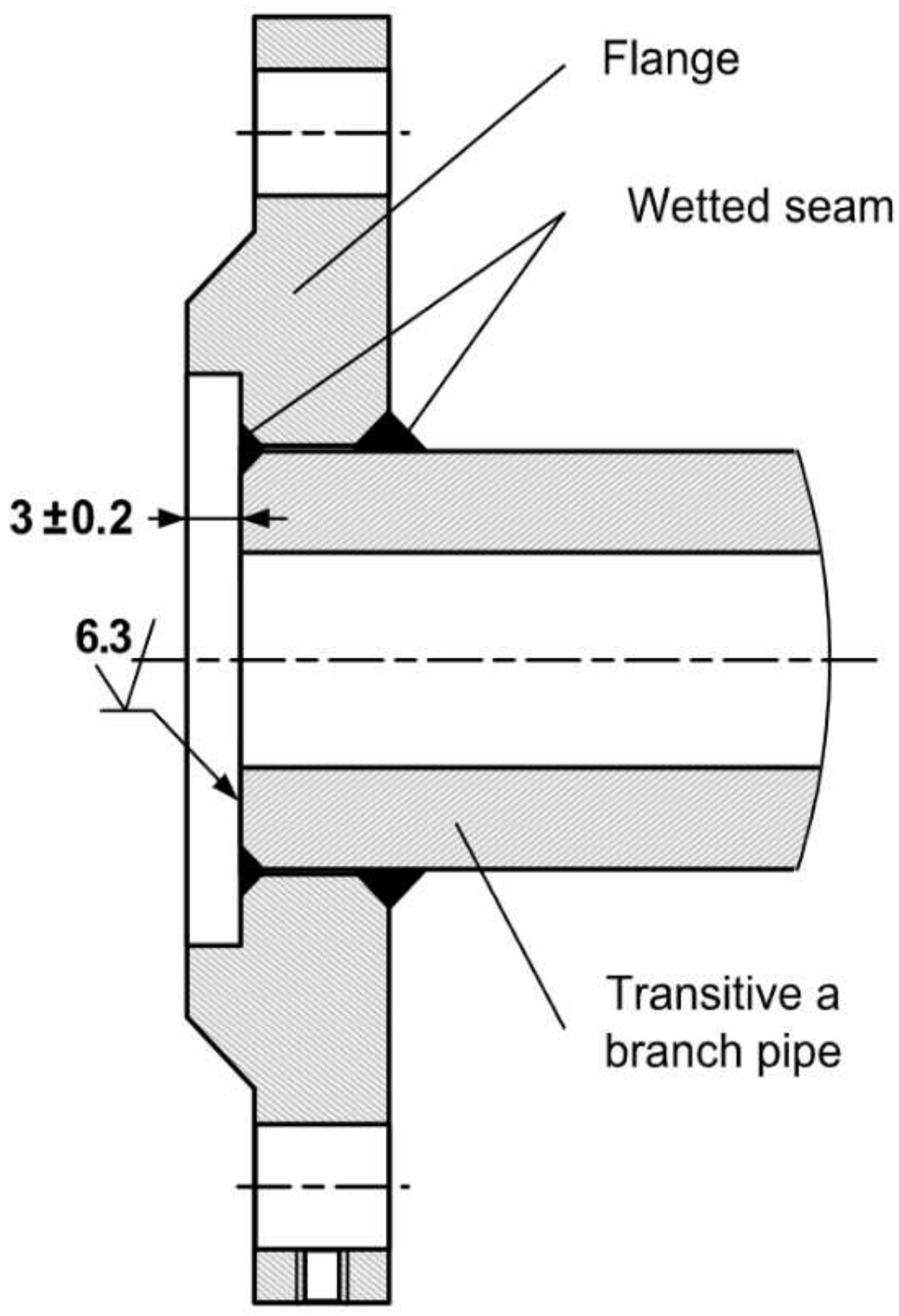

Fig.A.4. Flange DN20 and pipe adaptor welded together

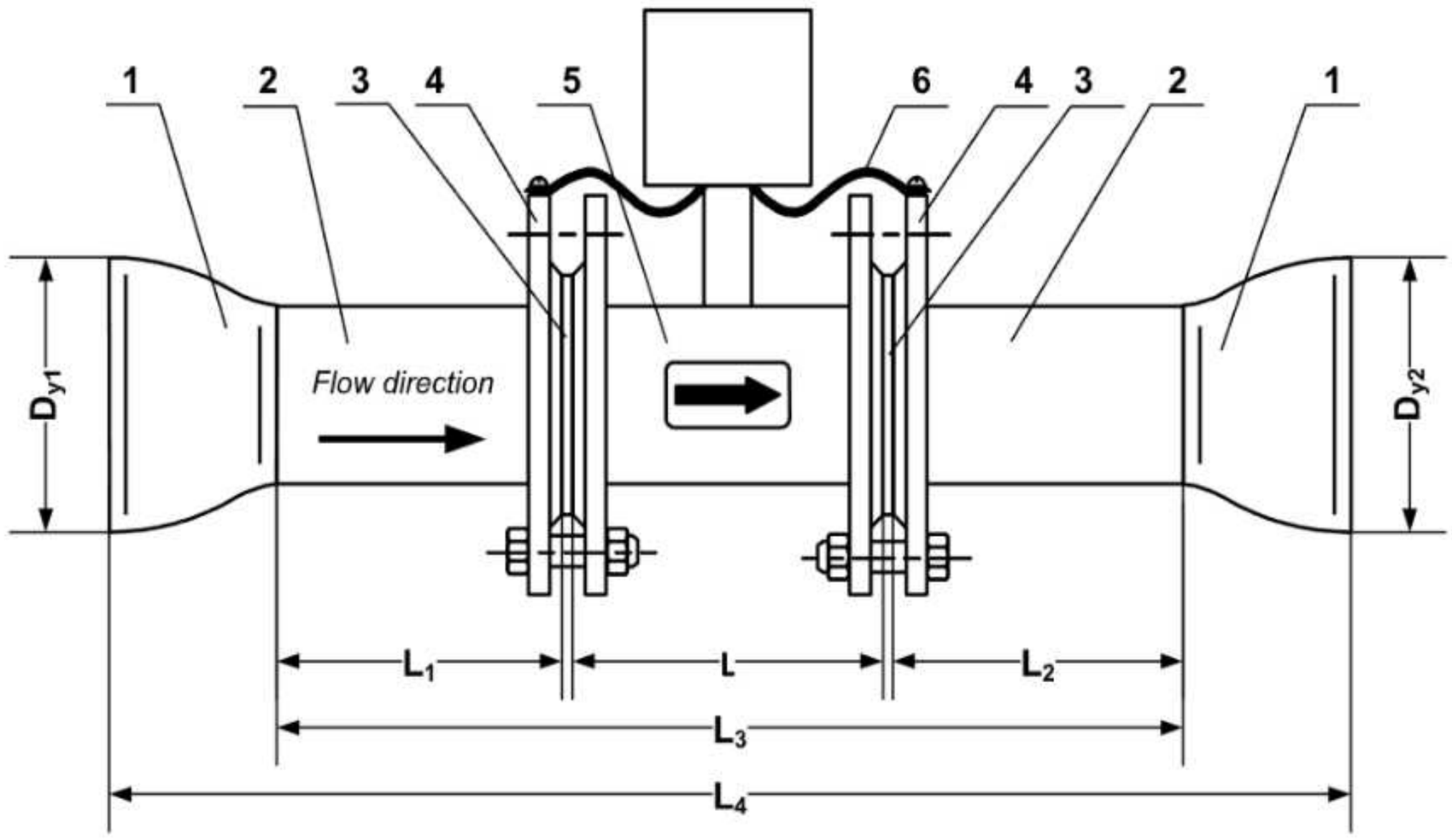

1 — taper adaptor; 2 — straight pipe run; 3 — gaskets; 4 — mating flange; 5 — flanged MF (flow pipe dimension simulator), 6 — wires connecting MF case and pipeline.

Fig.A.5. Assembly-welded structure for mounting flow meters of Pro-×22M× versions (lined with fluoroplastic) with protection rings (flanged) into the pipeline

Table A.2. Dimensions of the assembly-welded structure for MFs of Pro-×22M× versions (mm)

DN	DN_1, DN_2	L*	L_1*	L_2*	L_3*	L_4*	Notes
20	25	158	124	84	366	422	
	32					422	
	40					422	
	50					452	
	65					592	**
	80					602	**
25	32	158	149	99	406	462	
	40					462	
	50					492	
	65					632	**
	80					642	**
	100					652	**
32	40	202	184	119	505	561	
	50					591	
	65					611	
	80					741	**
	100					751	**
40	50	202	229	149	580	696	
	65					716	
	80					726	
	100					856	**
	125					896	**
	150					846	**

Table A.2 (continued)

DN	DN_1, DN_2	L*	L_1*	L_2*	L_3*	L_4*	Notes
50	65	203	285	185	673	809	
	80					819	
	100					829	
	125					869	
	150					819	
65	80	220	360	230	810	956	
	100					966	
	125					1006	
	150					956	
	200					996	
80	100	230	435	275	940	1096	
	125					1136	
	150					1196	
	200					1126	
	250					1376	**
	300					1376	**
	350					1636	**
100	125	251	535	335	1121	1318	
	150					1378	
	200					1308	
	250					1398	
	300					1398	
	350					1818	**
	400					1818	**
150	200	324	795	495	1614	1890	
	250					1970	
	300					1890	
	350					2050	
	400					2050	
	500					2650	**
200	250	362	1050	650	2062	2426	
	300					2426	
	350					2506	
	400					2506	
	500					3106	**
300	350	514	1565	965	3044	3488	
	400					3488	
	500					4088	**

* — reference dimensions without processing tolerances

** — adaptor is made of two concentric adaptors

Flat welded flanges for 2.5 MPa pressure (with a fixing ridge) included in the fitting assembly are modified as follows: a threaded hole M5 is drilled on the cylindrical flange surface to fix a wire (see Fig.A.2).

Note. The total length “L*”, mm, of flow meter, lined with polyurethane without protection rings reduced to 8 mm.

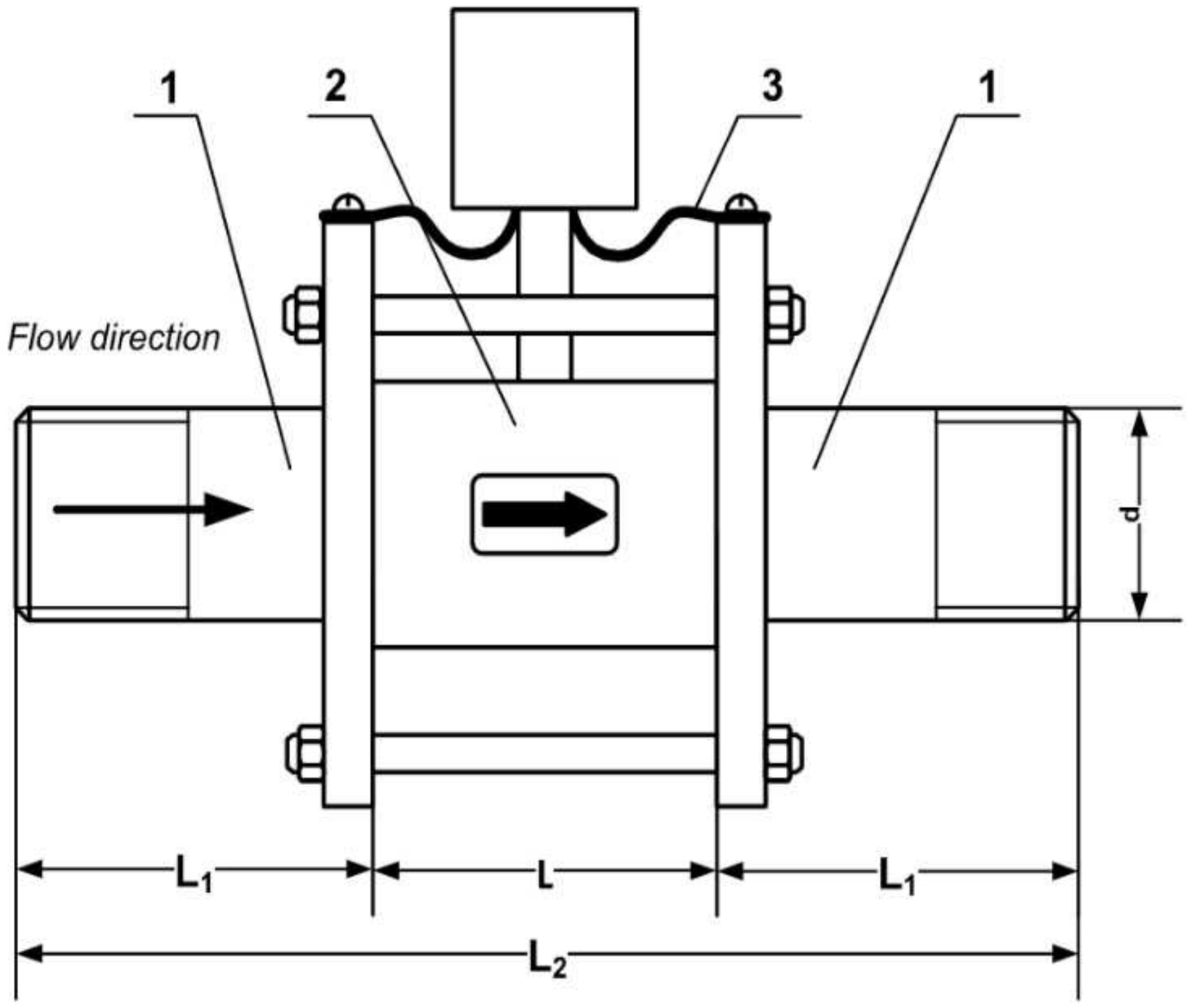

1 — adaptor with a flange; 2 — MF (flow pipe dimension simulator); 3 — wires connecting MF case and pipeline.

Fig. A.6. Assembly structure for mounting flow meters of Pro-×12M× versions (wafer type) with protection rings into plastic (metal-plastic) pipeline

Table A.3. Dimensions of the assembly structure for EFMs of Pro-×12M× versions (mm)

DN	L*	L_1*	L_2*	d
20	113	86	285	G 3/4 - B
25	113	102	317	G 1 - B
32	123	122	367	G 1 1/4 - B
40	133	152	437	G 1 1/2 - B
50	153	187	527	G 2 - B
65	174	232	638	G 2 1/2 - B
80	174	277	728	G 3 - B
100	215	337	889	G 4 - B

Flanges for 2.5 MPa pressure are used with adaptors:

- For DN20 – flanges of design type 1 (with a fixing ridge)
- For DN25 – DN80 — flanges of design type 3 (with a notch)

Flanges are modified before welding: a threaded hole M5 is drilled on the flange cylindrical surface to fix wires (Fig.A.2).

CAUTION! Mounting flow meters of Pro-×12M× versions into the plastic (metal-plastic) pipelines, and flow meters, polyurethane lined, without using an assembly structure (see Fig.A.6), or mounting flow meters of Pro-×22M× versions without protection rings does not provide electrical contact of the MFP case with the

fluid being measured. In this case manufacturer doesn't guarantee stable operation of the flow meter.

NOTE. When flow meters of Pro-×22M× versions with protection rings are mounted into the plastic (metal-plastic) pipeline, a grounding element ensures electrical contact with the fluid being measured. In this case you don't need to connect wires to pipeline flanges.

APPENDIX B. Holder to Fix Metal Sleeves for Power and Communication Cables

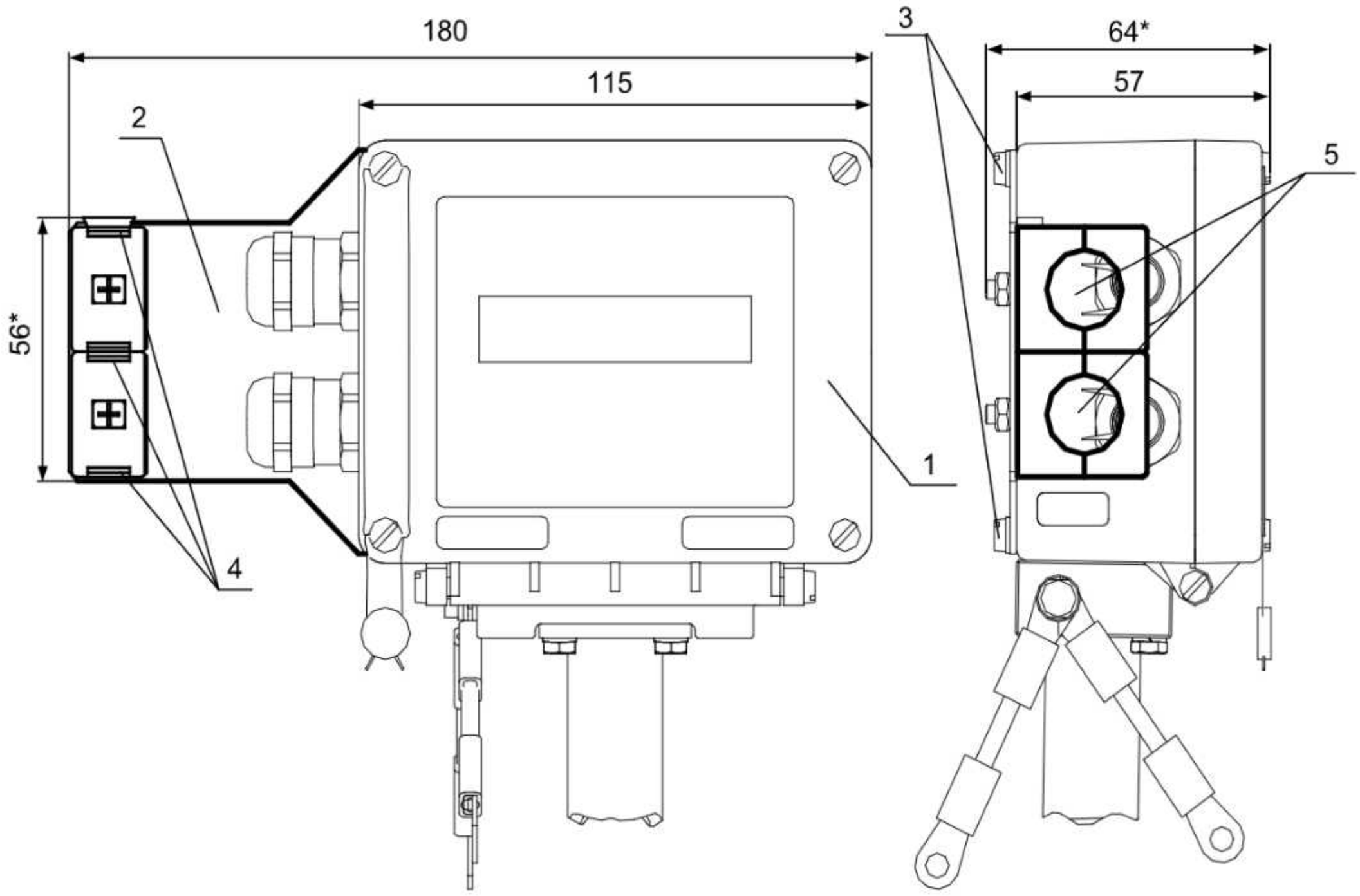

* — reference dimension

1 — measuring block; 2 — holder; 3 — screws to fix holder on the flow meter measuring block; 4 — metal sleeve clamps; 5 — holes for metal sleeves.

Fig.B.1. Measuring block with a holder to fix metal sleeves for power and communication cables

Notes

IOTAFLOW
SYSTEMS PVT. LTD

ELECTROMAGNETIC FLOW METER

IOTAFLOW MF "PRO M"

INSTALLATION MANUAL

Contact Us:-

IOTAFLOW SYSTEMS PVT. LTD.

A-2/13, Mayapuri Industrial Area
Phase-II, New Delhi - 110064
Phones: +91-11-4625 4601-06
Call: +919910693866
email: contact@iotaflow.com

Specifications subject to change without prior notice. © Iotaflow Systems Pvt. Ltd.

" If You Want To Manage It, Measure It "

www.iotaflow.com